Transformation of Stress

© 2002 The McGraw-Hill Companies, Inc. All rights reserved.

Introduction

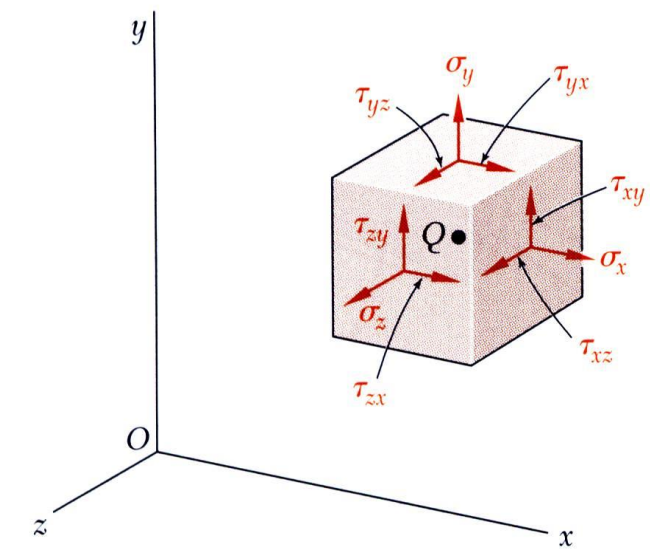

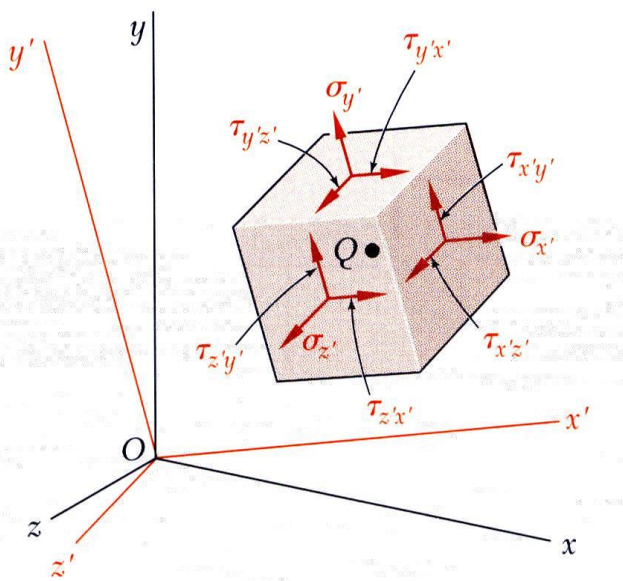

- The most general state of stress at a point may be represented by 6 components,

  $\sigma_x, \sigma_y, \sigma_z$ normal stresses

  $\tau_{xy}, \tau_{yz}, \tau_{zx}$ shearing stresses

  (Note : $\tau_{xy} = \tau_{yx}, \tau_{yz} = \tau_{zy}, \tau_{zx} = \tau_{xz}$)

- Same state of stress is represented by a different set of components if axes are rotated.

- The first part of the chapter is concerned with how the components of stress are transformed under a rotation of the coordinate axes. The second part of the chapter is devoted to a similar analysis of the transformation of the components of strain.

© 2002 The McGraw-Hill Companies, Inc. All rights reserved.

Introduction

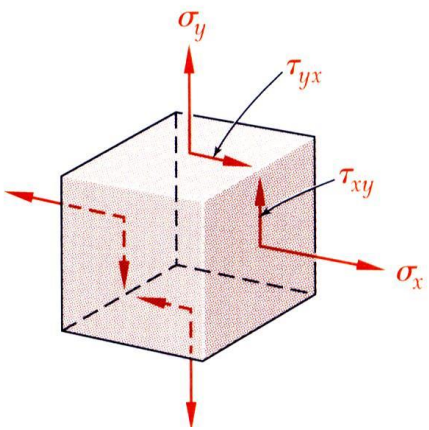

- *Plane Stress* - state of stress in which two faces of the cubic element are free of stress. For the illustrated example, the state of stress is defined by $\sigma_x, \sigma_y, \tau_{xy}$ and $\sigma_z = \tau_{zx} = \tau_{zy} = 0.$

- State of plane stress occurs in a thin plate subjected to forces acting in the midplane of the plate.

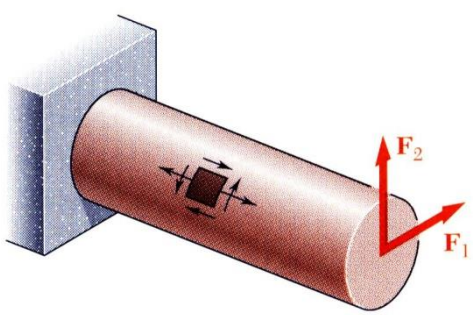

- State of plane stress also occurs on the free surface of a structural element or machine component, i.e., at any point of the surface not subjected to an external force.

© 2002 The McGraw-Hill Companies, Inc. All rights reserved.

Transformation of Plane Stress

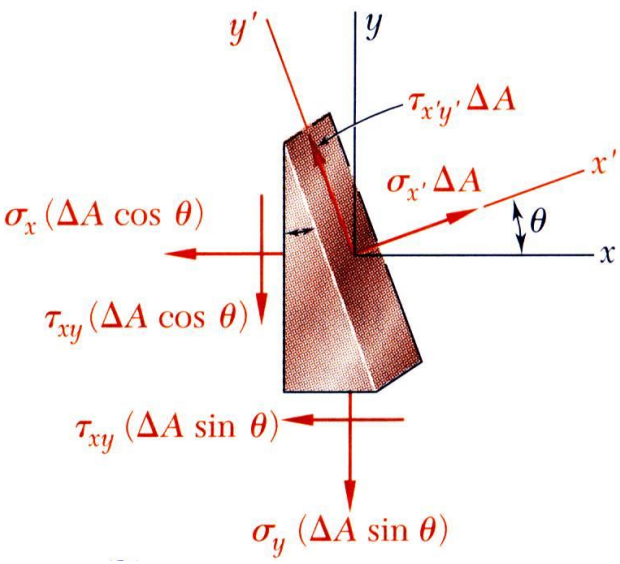

- Consider the conditions for equilibrium of a prismatic element with faces perpendicular to the x, y, and x' axes.

$$\sum F_{x'} = 0 = \sigma_{x'}\Delta A - \sigma_x(\Delta A\cos\theta)\cos\theta - \tau_{xy}(\Delta A\cos\theta)\sin\theta$$
$$-\sigma_y(\Delta A\sin\theta)\sin\theta - \tau_{xy}(\Delta A\sin\theta)\cos\theta$$
$$\sum F_{y'} = 0 = \tau_{x'y'}\Delta A + \sigma_x(\Delta A\cos\theta)\sin\theta - \tau_{xy}(\Delta A\cos\theta)\cos\theta$$
$$-\sigma_y(\Delta A\sin\theta)\cos\theta + \tau_{xy}(\Delta A\sin\theta)\sin\theta$$

- The equations may be rewritten to yield

$$\sigma_{x'} = \frac{\sigma_x + \sigma_y}{2} + \frac{\sigma_x - \sigma_y}{2}\cos 2\theta + \tau_{xy}\sin 2\theta$$
$$\sigma_{y'} = \frac{\sigma_x + \sigma_y}{2} - \frac{\sigma_x - \sigma_y}{2}\cos 2\theta - \tau_{xy}\sin 2\theta$$
$$\tau_{x'y'} = -\frac{\sigma_x - \sigma_y}{2}\sin 2\theta + \tau_{xy}\cos 2\theta$$

© 2002 The McGraw-Hill Companies, Inc. All rights reserved.

Principal Stresses

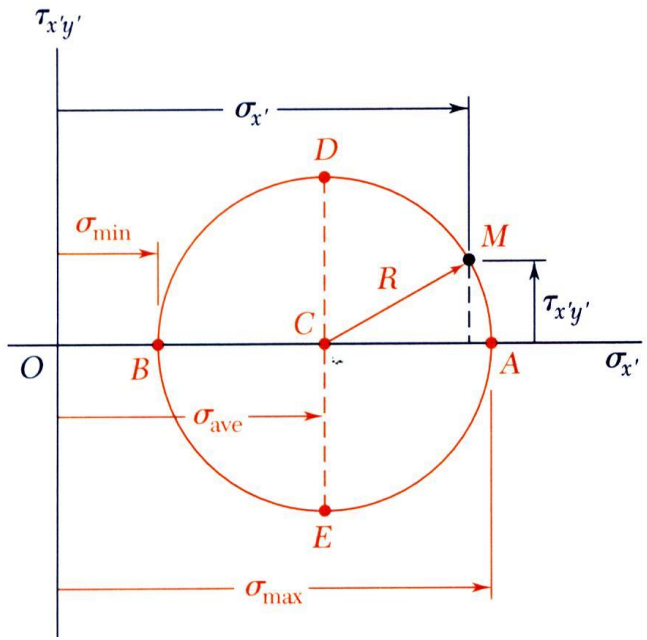

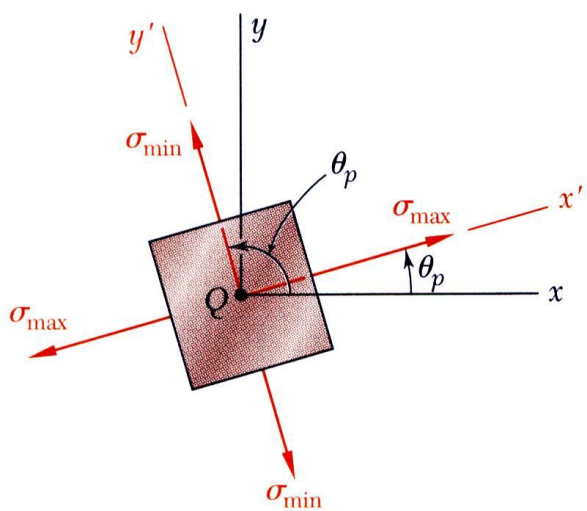

- The previous equations are combined to yield parametric equations for a circle,

$$(\sigma_{x'} - \sigma_{ave})^2 + \tau_{x'y'}^2 = R^2$$

where

$$\sigma_{ave} = \frac{\sigma_x + \sigma_y}{2} \qquad R = \sqrt{\left(\frac{\sigma_x - \sigma_y}{2}\right)^2 + \tau_{xy}^2}$$

- *Principal stresses* occur on the *principal planes of stress* with zero shearing stresses.

$$\sigma_{\max,\min} = \frac{\sigma_x + \sigma_y}{2} \pm \sqrt{\left(\frac{\sigma_x - \sigma_y}{2}\right)^2 + \tau_{xy}^2}$$

$$\tan 2\theta_p = \frac{2\tau_{xy}}{\sigma_x - \sigma_y}$$

Note : defines two angles separated by 90°

© 2002 The McGraw-Hill Companies, Inc. All rights reserved.

Maximum Shearing Stress

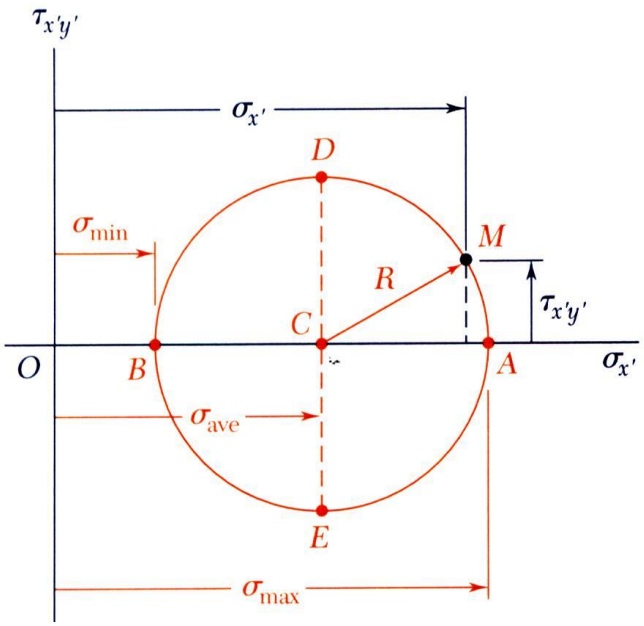

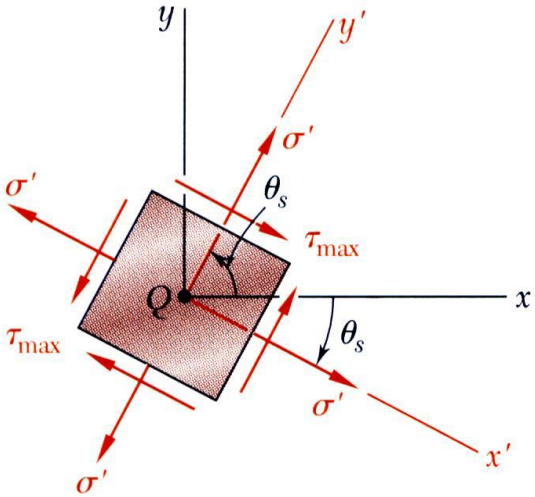

Maximum shearing stress occurs for $\sigma_{x'} = \sigma_{ave}$

$$\tau_{\max} = R = \sqrt{\left(\frac{\sigma_x - \sigma_y}{2}\right)^2 + \tau_{xy}^2}$$

$$\tan 2\theta_s = -\frac{\sigma_x - \sigma_y}{2\tau_{xy}}$$

Note : defines two angles separated by 90° and offset from θ_p by 45°

$$\sigma' = \sigma_{ave} = \frac{\sigma_x + \sigma_y}{2}$$

© 2002 The McGraw-Hill Companies, Inc. All rights reserved.

Example 7.01

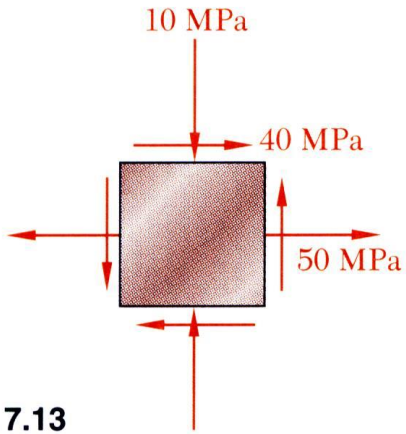

Fig. 7.13

For the state of plane stress shown, determine (a) the principal panes, (b) the principal stresses, (c) the maximum shearing stress and the corresponding normal stress.

SOLUTION:

- Find the element orientation for the principal stresses from

$$\tan 2\theta_p = \frac{2\tau_{xy}}{\sigma_x - \sigma_y}$$

- Determine the principal stresses from

$$\sigma_{\max,\min} = \frac{\sigma_x + \sigma_y}{2} \pm \sqrt{\left(\frac{\sigma_x - \sigma_y}{2}\right)^2 + \tau_{xy}^2}$$

- Calculate the maximum shearing stress with

$$\tau_{\max} = \sqrt{\left(\frac{\sigma_x - \sigma_y}{2}\right)^2 + \tau_{xy}^2}$$

$$\sigma' = \frac{\sigma_x + \sigma_y}{2}$$

© 2002 The McGraw-Hill Companies, Inc. All rights reserved.

Example 7.01

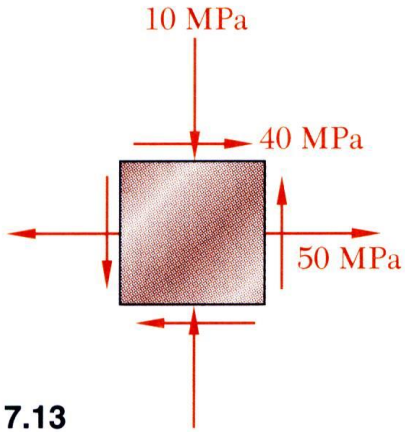

Fig. 7.13

$\sigma_x = +50\,\text{MPa}$ $\tau_{xy} = +40\,\text{MPa}$

$\sigma_x = -10\,\text{MPa}$

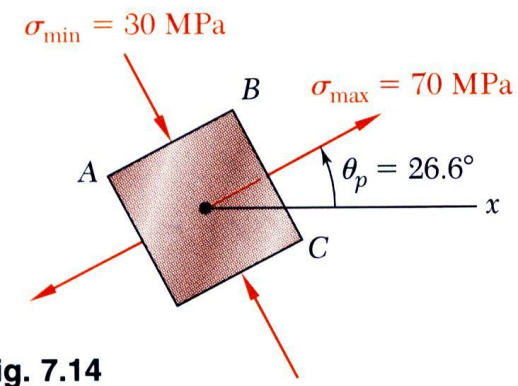

Fig. 7.14

SOLUTION:

- Find the element orientation for the principal stresses from

$$\tan 2\theta_p = \frac{2\tau_{xy}}{\sigma_x - \sigma_y} = \frac{2(+40)}{50-(-10)} = 1.333$$

$$2\theta_p = 53.1°,\ 233.1°$$

$$\boxed{\theta_p = 26.6°,\ 116.6°}$$

- Determine the principal stresses from

$$\sigma_{\max,\min} = \frac{\sigma_x + \sigma_y}{2} \pm \sqrt{\left(\frac{\sigma_x - \sigma_y}{2}\right)^2 + \tau_{xy}^2}$$

$$= 20 \pm \sqrt{(30)^2 + (40)^2}$$

$$\boxed{\begin{aligned}\sigma_{\max} &= 70\,\text{MPa}\\ \sigma_{\min} &= -30\,\text{MPa}\end{aligned}}$$

© 2002 The McGraw-Hill Companies, Inc. All rights reserved.

Example 7.01

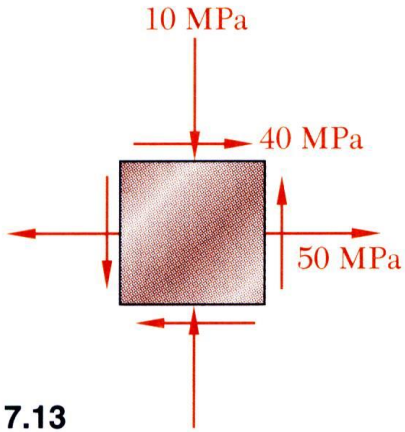

Fig. 7.13

$\sigma_x = +50\,\text{MPa}$ $\tau_{xy} = +40\,\text{MPa}$

$\sigma_x = -10\,\text{MPa}$

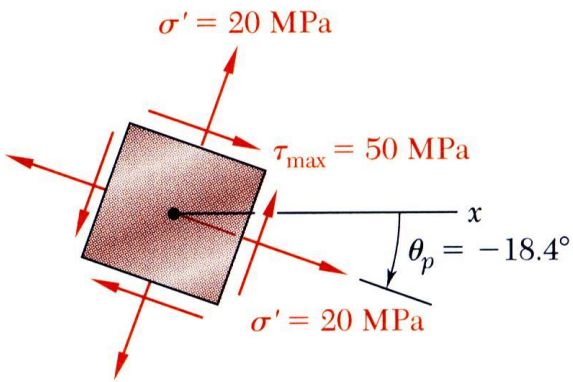

Fig. 7.16

- Calculate the maximum shearing stress with

$$\tau_{\max} = \sqrt{\left(\frac{\sigma_x - \sigma_y}{2}\right)^2 + \tau_{xy}^2}$$

$$= \sqrt{(30)^2 + (40)^2}$$

$$\boxed{\tau_{\max} = 50\,\text{MPa}}$$

$$\theta_s = \theta_p - 45$$

$$\boxed{\theta_s = -18.4°,\ 71.6°}$$

- The corresponding normal stress is

$$\sigma' = \sigma_{ave} = \frac{\sigma_x + \sigma_y}{2} = \frac{50 - 10}{2}$$

$$\boxed{\sigma' = 20\,\text{MPa}}$$

© 2002 The McGraw-Hill Companies, Inc. All rights reserved.

Sample Problem 7.1

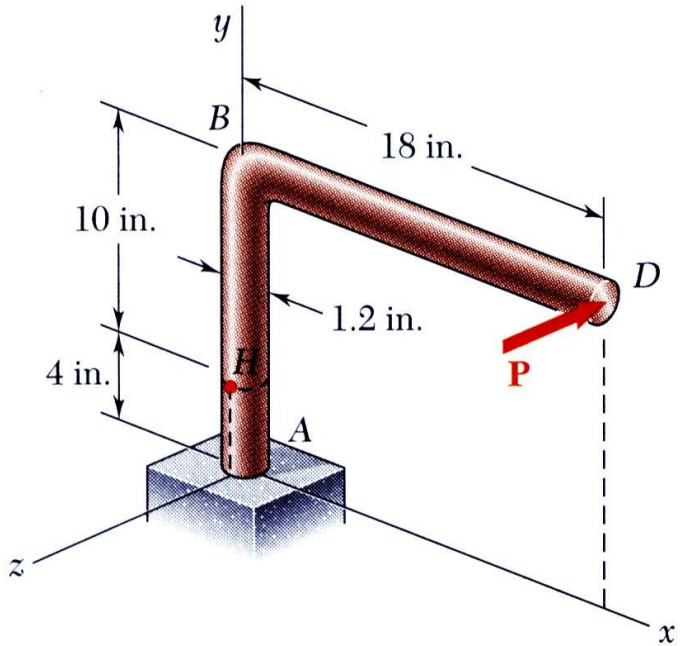

A single horizontal force *P* of 150 lb magnitude is applied to end D of lever *ABD*. Determine (a) the normal and shearing stresses on an element at point *H* having sides parallel to the *x* and *y* axes, (b) the principal planes and principal stresses at the point *H*.

SOLUTION:

- Determine an equivalent force-couple system at the center of the transverse section passing through *H*.
- Evaluate the normal and shearing stresses at *H*.
- Determine the principal planes and calculate the principal stresses.

© 2002 The McGraw-Hill Companies, Inc. All rights reserved.

Sample Problem 7.1

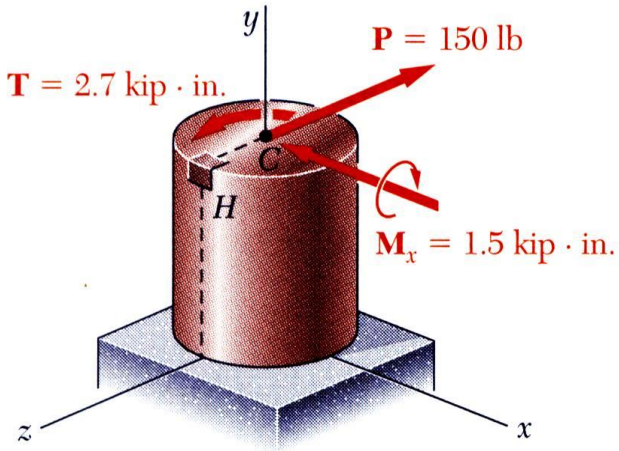

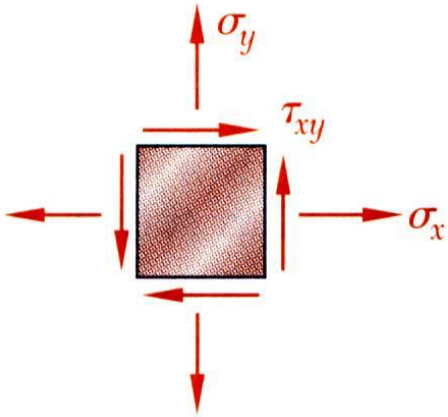

SOLUTION:

- Determine an equivalent force-couple system at the center of the transverse section passing through *H*.

$$P = 150\,\text{lb}$$

$$T = (150\,\text{lb})(18\,\text{in}) = 2.7\,\text{kip}\cdot\text{in}$$

$$M_x = (150\,\text{lb})(10\,\text{in}) = 1.5\,\text{kip}\cdot\text{in}$$

- Evaluate the normal and shearing stresses at *H*.

$$\sigma_y = +\frac{Mc}{I} = +\frac{(1.5\,\text{kip}\cdot\text{in})(0.6\,\text{in})}{\frac{1}{4}\pi(0.6\,\text{in})^4}$$

$$\tau_{xy} = +\frac{Tc}{J} = +\frac{(2.7\,\text{kip}\cdot\text{in})(0.6\,\text{in})}{\frac{1}{2}\pi(0.6\,\text{in})^4}$$

$$\boxed{\sigma_x = 0 \quad \sigma_y = +8.84\,\text{ksi} \quad \tau_y = +7.96\,\text{ksi}}$$

© 2002 The McGraw-Hill Companies, Inc. All rights reserved.

Sample Problem 7.1

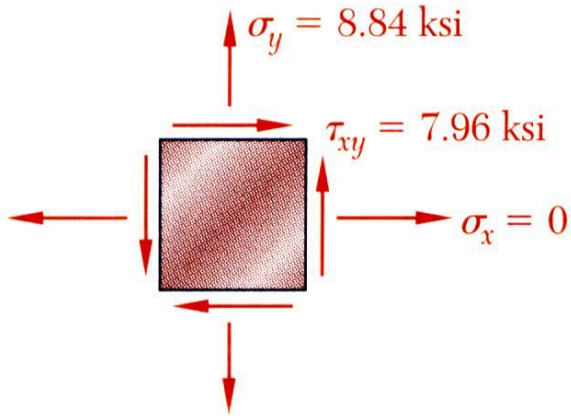

- Determine the principal planes and calculate the principal stresses.

$$\tan 2\theta_p = \frac{2\tau_{xy}}{\sigma_x - \sigma_y} = \frac{2(7.96)}{0 - 8.84} = -1.8$$

$$2\theta_p = -61.0°, 119°$$

$$\boxed{\theta_p = -30.5°,\ 59.5°}$$

$$\sigma_{\max,\min} = \frac{\sigma_x + \sigma_y}{2} \pm \sqrt{\left(\frac{\sigma_x - \sigma_y}{2}\right)^2 + \tau_{xy}^2}$$

$$= \frac{0 + 8.84}{2} \pm \sqrt{\left(\frac{0 - 8.84}{2}\right)^2 + (7.96)^2}$$

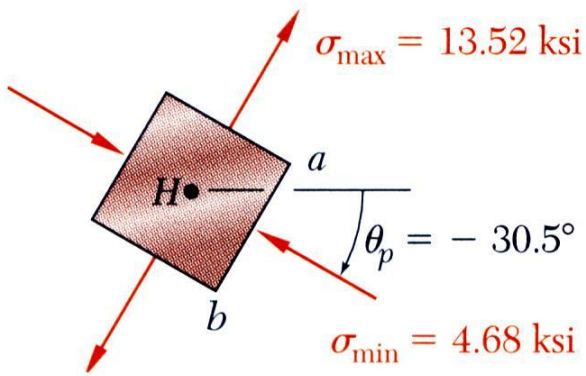

$$\boxed{\begin{aligned}\sigma_{\max} &= +13.52\,\text{ksi}\\ \sigma_{\min} &= -4.68\,\text{ksi}\end{aligned}}$$

© 2002 The McGraw-Hill Companies, Inc. All rights reserved.

Mohr's Circle for Plane Stress

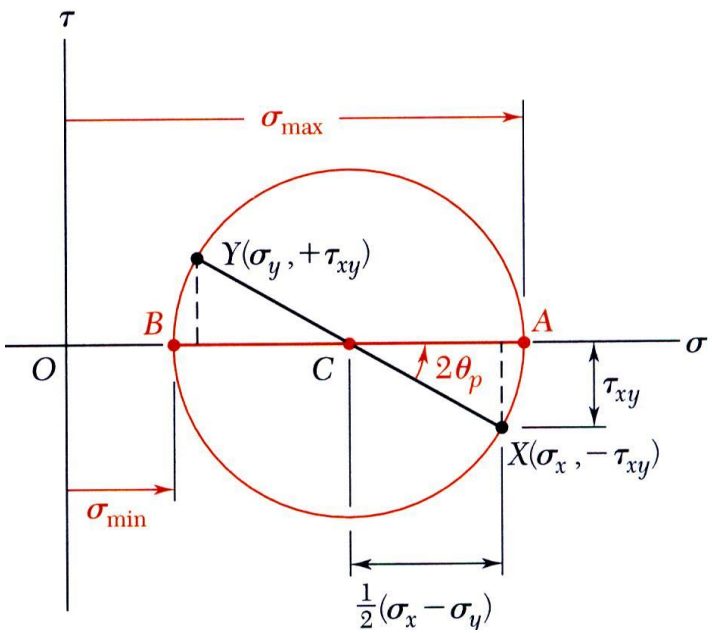

- With the physical significance of Mohr's circle for plane stress established, it may be applied with simple geometric considerations. Critical values are estimated graphically or calculated.

- For a known state of plane stress $\sigma_x, \sigma_y, \tau_{xy}$ plot the points *X* and *Y* and construct the circle centered at *C*.

$$\sigma_{ave} = \frac{\sigma_x + \sigma_y}{2} \qquad R = \sqrt{\left(\frac{\sigma_x - \sigma_y}{2}\right)^2 + \tau_{xy}^2}$$

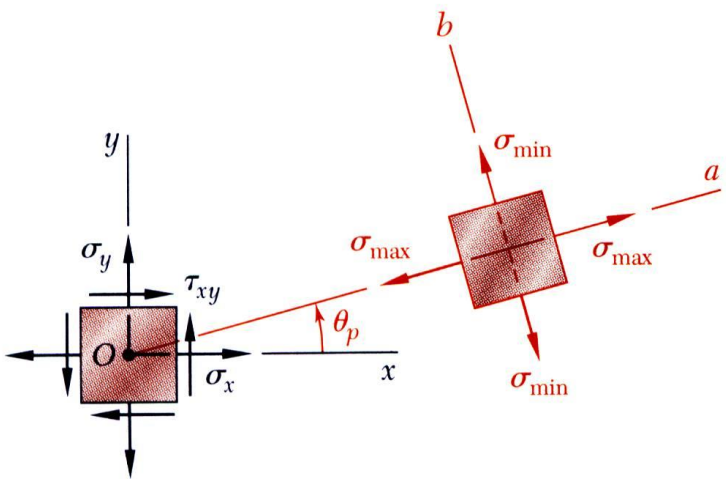

- The principal stresses are obtained at *A* and *B*.

$$\sigma_{\max,\min} = \sigma_{ave} \pm R$$

$$\tan 2\theta_p = \frac{2\tau_{xy}}{\sigma_x - \sigma_y}$$

The direction of rotation of *Ox* to *Oa* is the same as *CX* to *CA*.

© 2002 The McGraw-Hill Companies, Inc. All rights reserved.

Mohr's Circle for Plane Stress

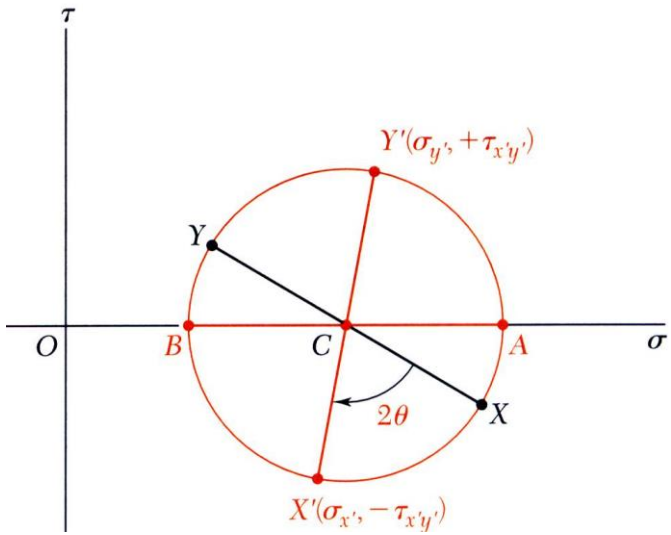

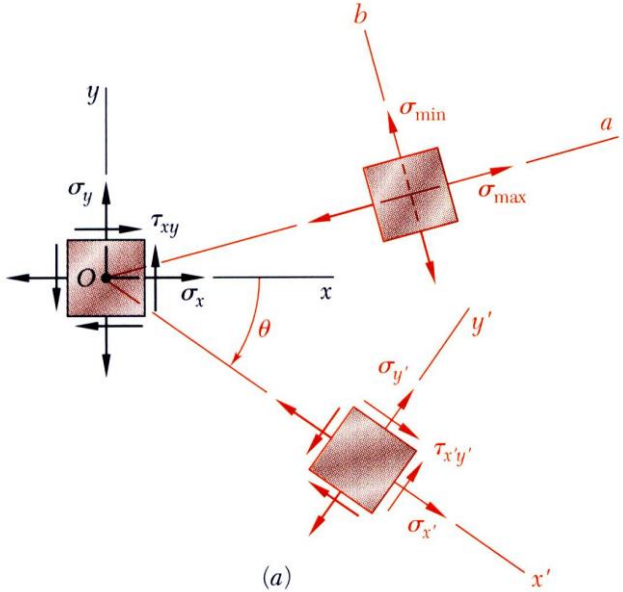

- With Mohr's circle uniquely defined, the state of stress at other axes orientations may be depicted.
- For the state of stress at an angle θ with respect to the *xy* axes, construct a new diameter *X'Y'* at an angle 2θ with respect to *XY*.
- Normal and shear stresses are obtained from the coordinates *X'Y'*.

© 2002 The McGraw-Hill Companies, Inc. All rights reserved.

Mohr's Circle for Plane Stress

- Mohr's circle for centric axial loading:

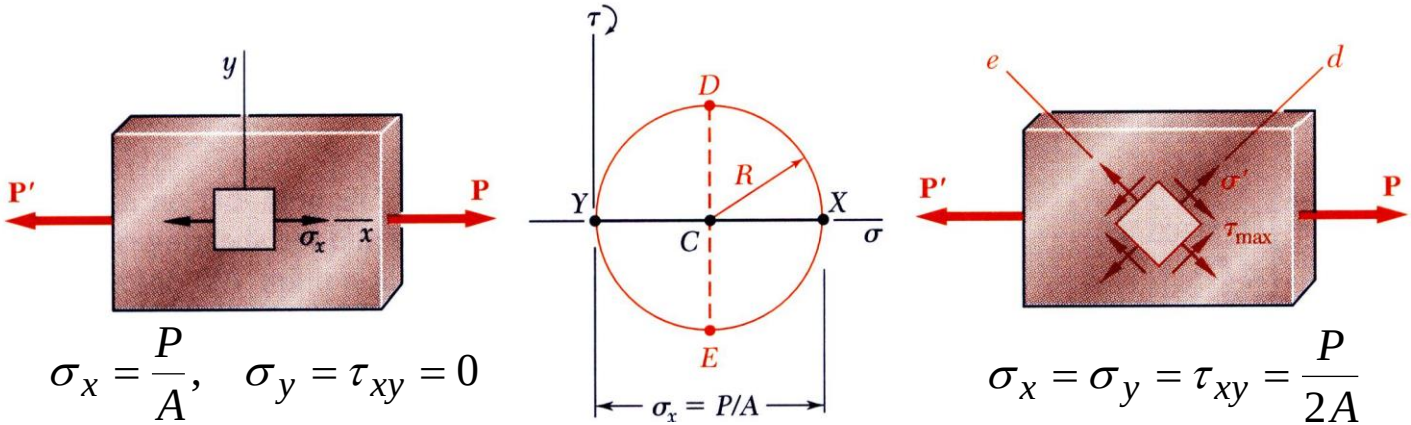

$$\sigma_x = \frac{P}{A}, \quad \sigma_y = \tau_{xy} = 0$$

$$\sigma_x = \sigma_y = \tau_{xy} = \frac{P}{2A}$$

- Mohr's circle for torsional loading:

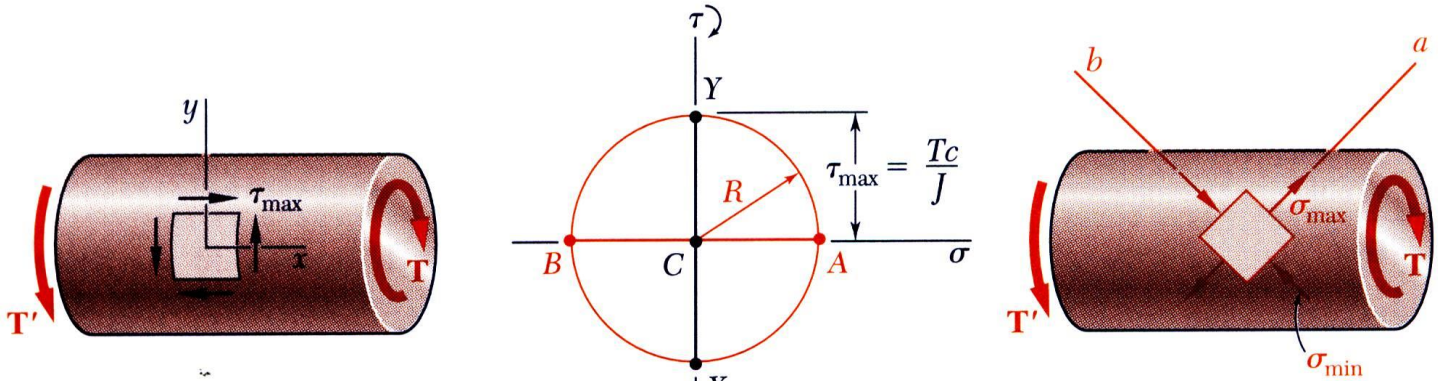

$$\sigma_x = \sigma_y = 0 \quad \tau_{xy} = \frac{Tc}{J}$$

$$\sigma_x = \sigma_y = \frac{Tc}{J} \quad \tau_{xy} = 0$$

© 2002 The McGraw-Hill Companies, Inc. All rights reserved.

Example 7.02

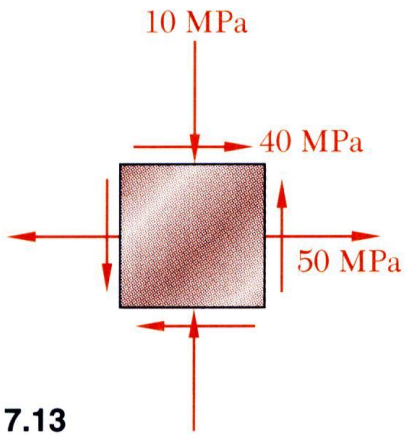

Fig. 7.13

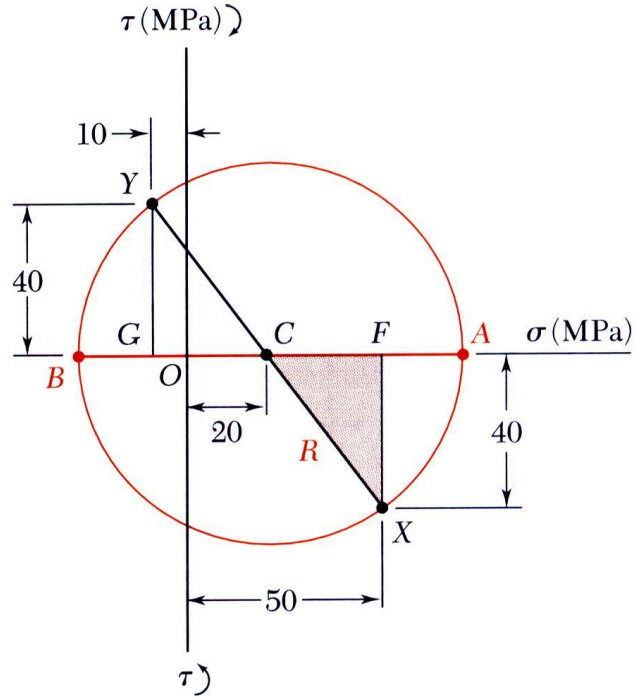

For the state of plane stress shown, (a) construct Mohr's circle, determine (b) the principal planes, (c) the principal stresses, (d) the maximum shearing stress and the corresponding normal stress.

SOLUTION:

- Construction of Mohr's circle

$$\sigma_{ave} = \frac{\sigma_x + \sigma_y}{2} = \frac{(50)+(-10)}{2} = 20\,\text{MPa}$$

$$CF = 50 - 20 = 30\,\text{MPa} \qquad FX = 40\,\text{MPa}$$

$$R = CX = \sqrt{(30)^2 + (40)^2} = 50\,\text{MPa}$$

© 2002 The McGraw-Hill Companies, Inc. All rights reserved.

Example 7.02

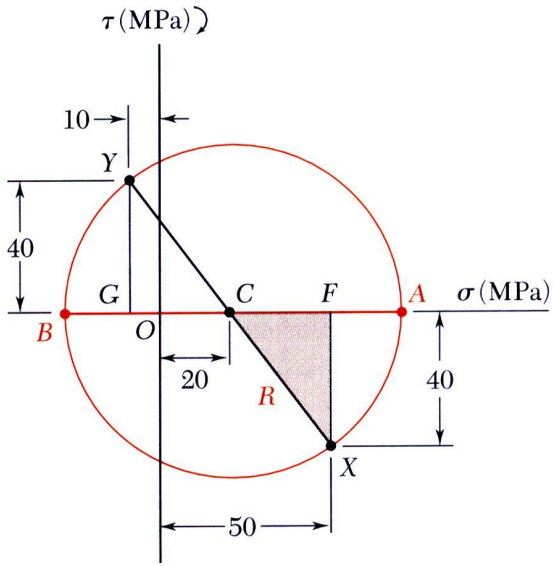

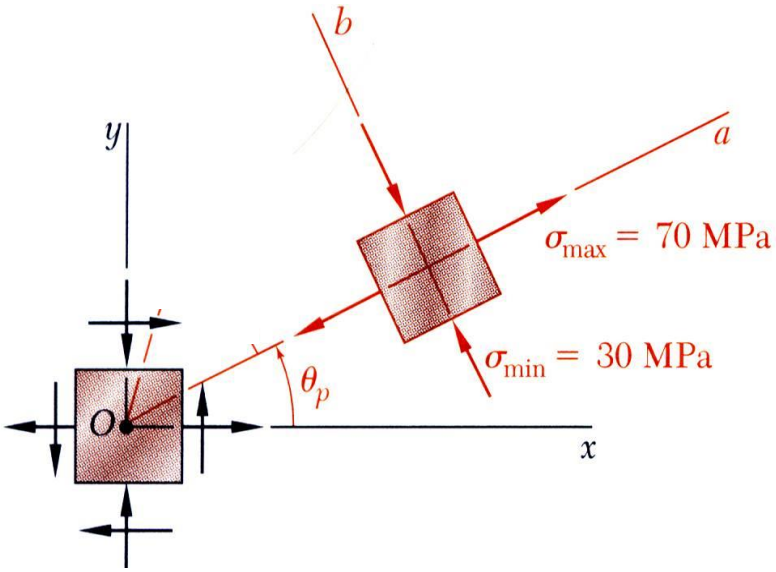

- Principal planes and stresses

$$\sigma_{\max} = OA = OC + CA = 20 + 50$$

$$\boxed{\sigma_{\max} = 70\,\text{MPa}}$$

$$\sigma_{\max} = OB = OC - BC = 20 - 50$$

$$\boxed{\sigma_{\max} = -30\,\text{MPa}}$$

$$\tan 2\theta_p = \frac{FX}{CP} = \frac{40}{30}$$

$$2\theta_p = 53.1°$$

$$\boxed{\theta_p = 26.6°}$$

© 2002 The McGraw-Hill Companies, Inc. All rights reserved.

Example 7.02

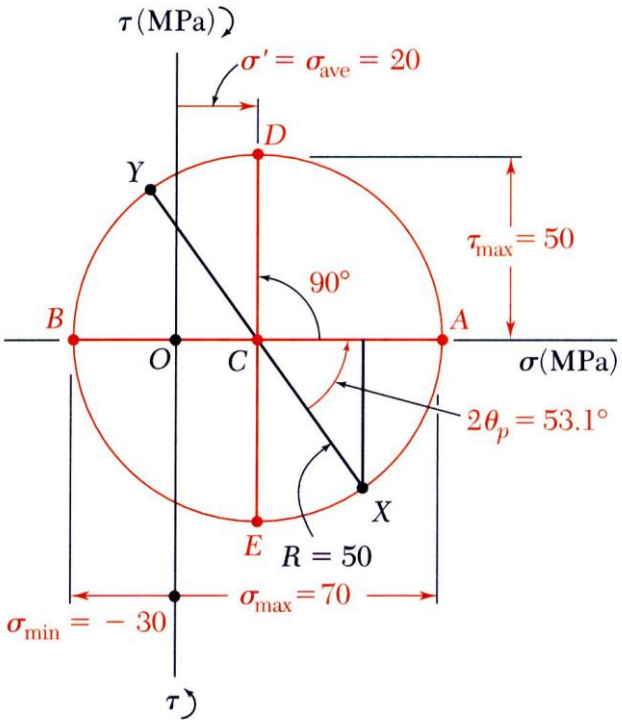

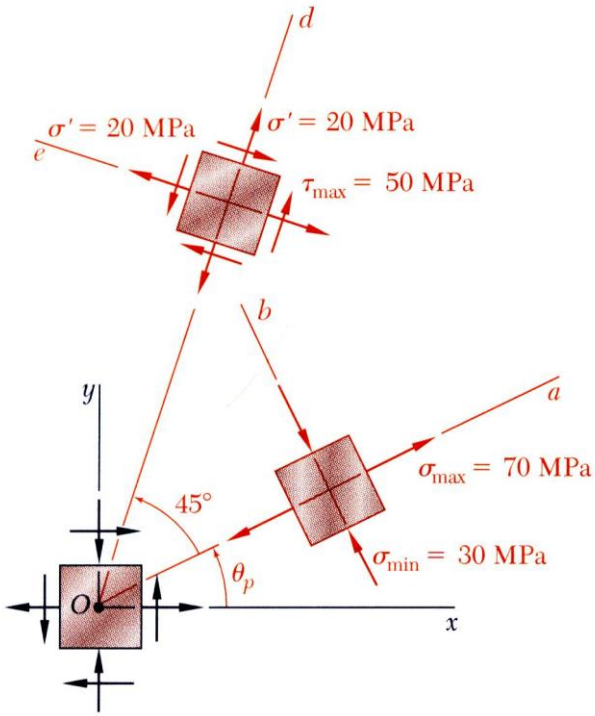

- Maximum shear stress

$$\theta_s = \theta_p + 45° \qquad \tau_{\max} = R \qquad \sigma' = \sigma_{ave}$$

$$\boxed{\theta_s = 71.6°} \qquad \boxed{\tau_{\max} = 50\ \text{MPa}} \qquad \boxed{\sigma' = 20\ \text{MPa}}$$

© 2002 The McGraw-Hill Companies, Inc. All rights reserved.

Sample Problem 7.2

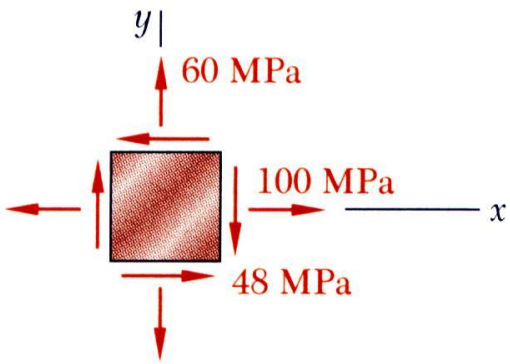

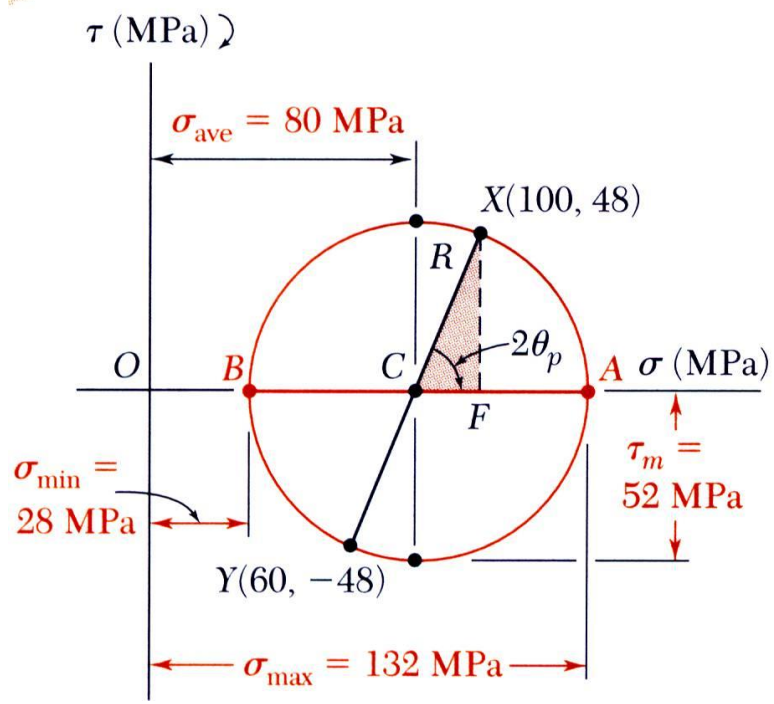

For the state of stress shown, determine (a) the principal planes and the principal stresses, (b) the stress components exerted on the element obtained by rotating the given element counterclockwise through 30 degrees.

SOLUTION:

- Construct Mohr's circle

$$\sigma_{ave} = \frac{\sigma_x + \sigma_y}{2} = \frac{100 + 60}{2} = 80\,\text{MPa}$$

$$R = \sqrt{(CF)^2 + (FX)^2} = \sqrt{(20)^2 + (48)^2} = 52\,\text{MPa}$$

© 2002 The McGraw-Hill Companies, Inc. All rights reserved.

Sample Problem 7.2

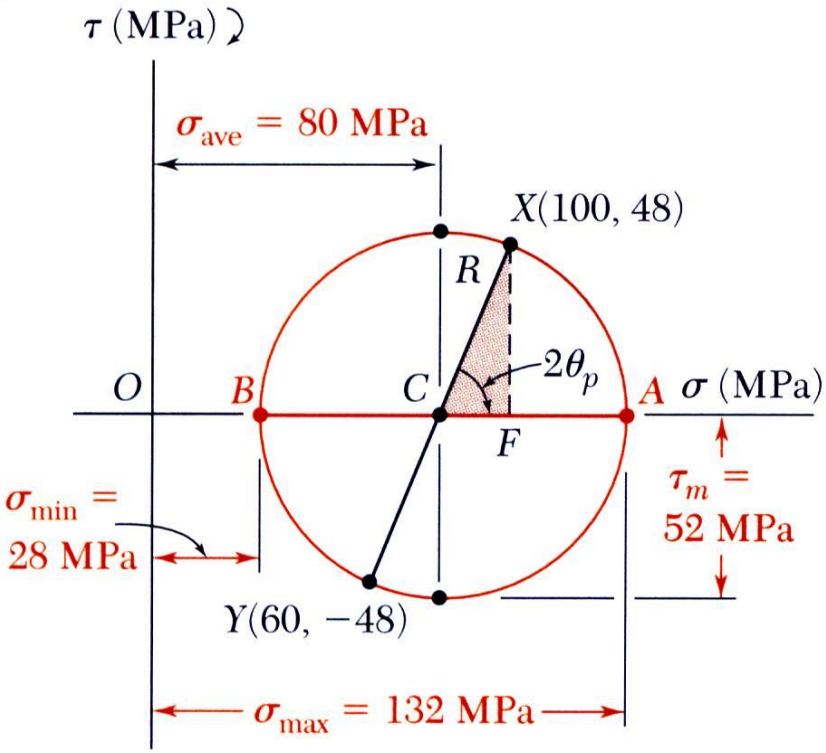

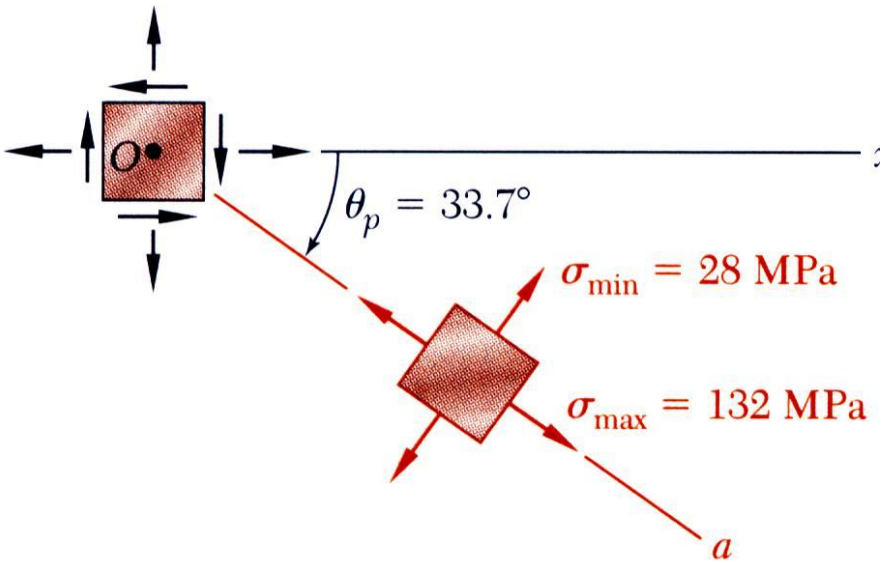

- Principal planes and stresses

$$\tan 2\theta_p = \frac{XF}{CF} = \frac{48}{20} = 2.4$$

$$2\theta_p = 67.4°$$

$$\boxed{\theta_p = 33.7° \text{ clockwise}}$$

$$\sigma_{max} = OA = OC + CA$$
$$= 80 + 52$$
$$\boxed{\sigma_{max} = +132\,\text{MPa}}$$

$$\sigma_{max} = OA = OC - BC$$
$$= 80 - 52$$
$$\boxed{\sigma_{min} = +28\,\text{MPa}}$$

© 2002 The McGraw-Hill Companies, Inc. All rights reserved.

Sample Problem 7.2

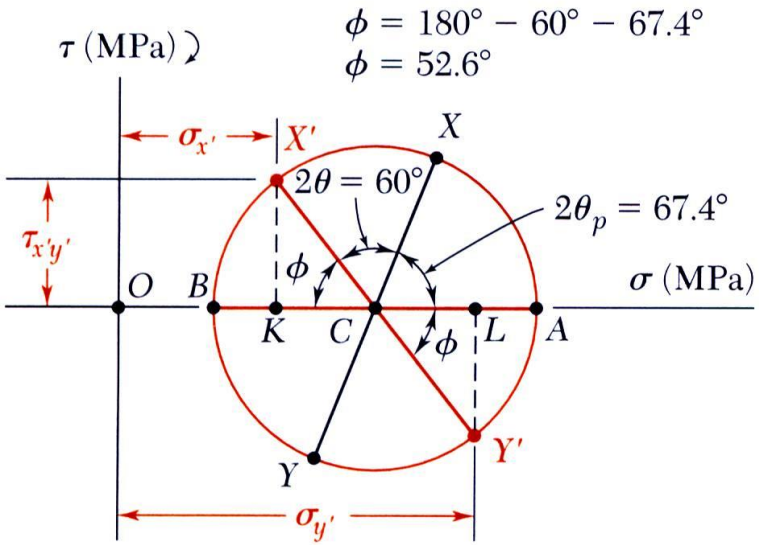

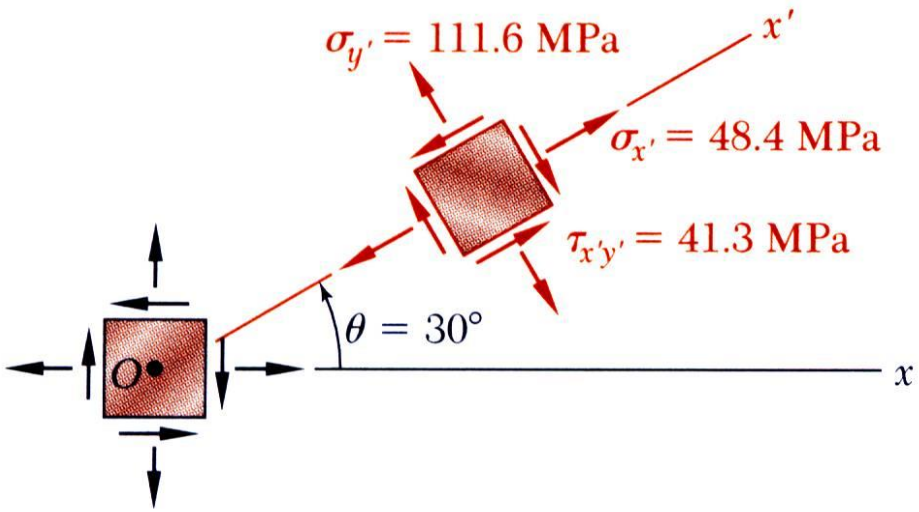

- Stress components after rotation by 30°

  Points X' and Y' on Mohr's circle that correspond to stress components on the rotated element are obtained by rotating XY counterclockwise through $2\theta = 60°$

$$\phi = 180° - 60° - 67.4° = 52.6°$$

$$\sigma_{x'} = OK = OC - KC = 80 - 52\cos 52.6°$$

$$\sigma_{y'} = OL = OC + CL = 80 + 52\cos 52.6°$$

$$\tau_{x'y'} = KX' = 52\sin 52.6°$$

$$\boxed{\begin{aligned} \sigma_{x'} &= +48.4\,\text{MPa} \\ \sigma_{y'} &= +111.6\,\text{MPa} \\ \tau_{x'y'} &= 41.3\,\text{MPa} \end{aligned}}$$

© 2002 The McGraw-Hill Companies, Inc. All rights reserved.